L8543169
11/2015 rev 0

IRI.CELL

BENINCÀ®
TECHNOLOGY TO OPEN

1

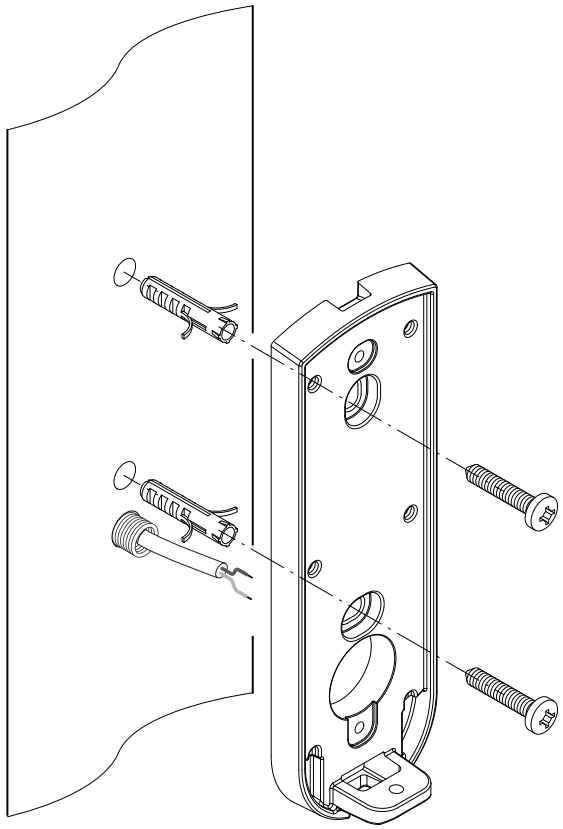

2

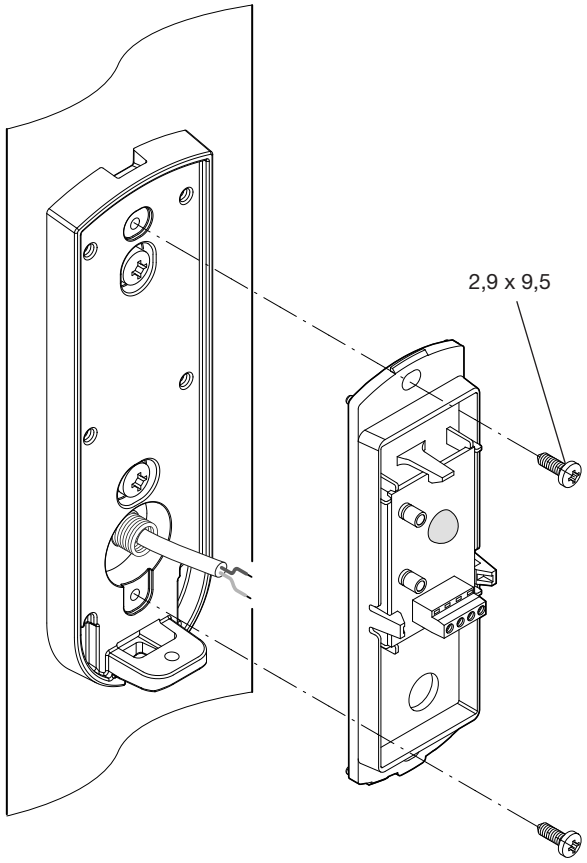

3

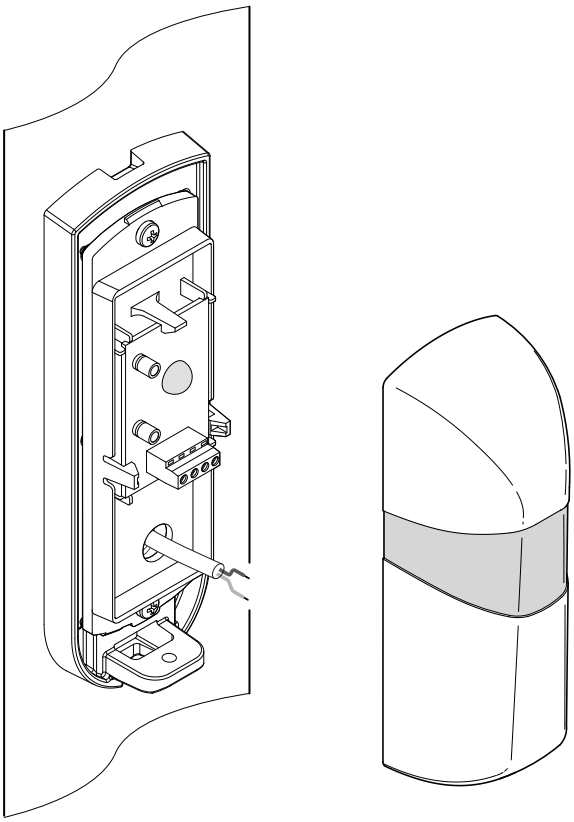

4

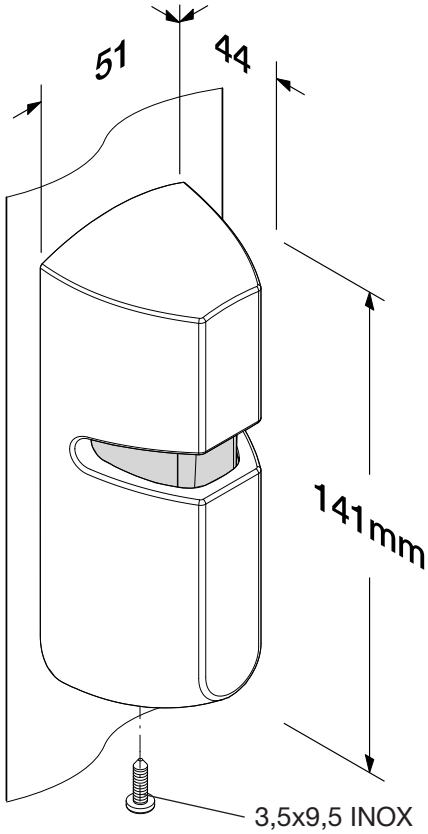

AUTOMATISMI BENINCÀ SpA - Via Capitello, 45 - 36066 Sandrigo (VI) ITALY - Tel. 0444 751030 r.a. - Fax 0444 759728
www.beninca.com - sales@beninca.it